R 51X94/500°
Reflector

- For infrared and red light
- High temperature resistant until 500 °C
- Hole Ø3.3 mm (2x)
- Suitable for polarized light

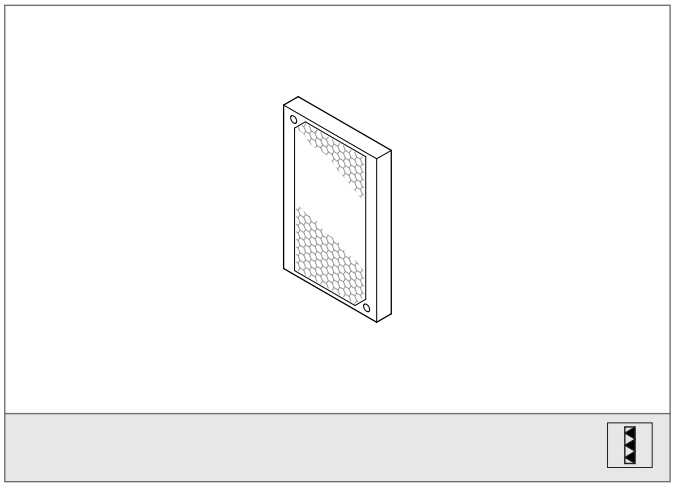

Safety instructions

The Instruments are not to be used for safety applications, in particular applications in which safety of persons depends on proper operation of the instruments.
These instruments shall exclusively be used by qualified personnel.

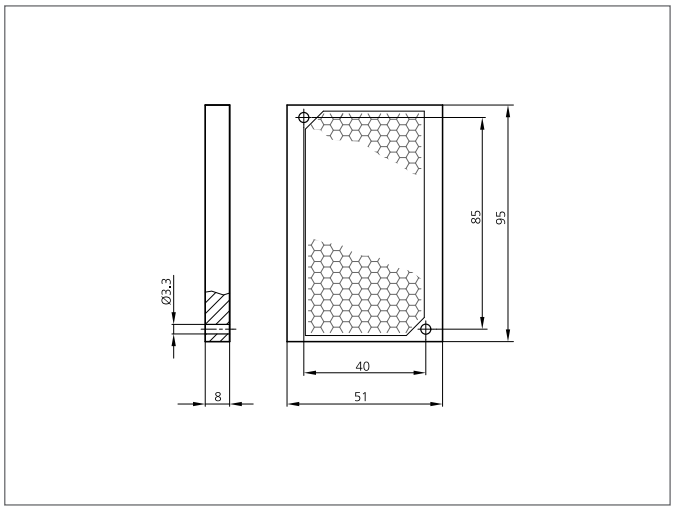

TECHNICAL INFORMATION (typ.)	+20°C, 24V DC
Mounting	2 holes
Size	51 x 94 mm (Surface)
Design	rectangular
Emitted light	Infrared and red
Ambient temperature	until 500 °C
Model	Reflector
Height	9 mm